INTENTIONAL POWER SYSTEM SEPARATION IN THE ERA OF RENEWABLES AND SMART GRIDS: A LITERATURE REVIEW

Mbey Vincent, Alayande Akintunde Samson, Sunday Adetona',& Adeola Balogun

Department of Electrical and Electronics Engineering,
University of Lagos, Akoka-Yaba, Lagos
mbeyvincent@gmail.com, , obalogun@unilag.edu.ng, sadetona@unilag.edu.ng

Corresponding Author's Contact: mbeyvincent@gmail.com/+234 8162386046

ABSTRACT

Intentional power system separation, commonly referred to as controlled islanding, has become an essential strategy for mitigating large-scale grid disturbances in modern power systems characterized by high renewable energy penetration and increasing structural complexity. This paper presents a systematic and critical review of existing controlled islanding methodologies, focusing on how different approaches address the fundamental problem of partitioning a power network into stable and self-sustaining islands. The review covers key classes of techniques, including slow coherency-based methods, data-driven approaches, optimization frameworks, graph-theoretic models, and emerging machine learning-based solutions. Rather than treating islanding as a purely static partitioning problem, recent developments emphasize the integration of dynamic system behaviour, real-time measurements, and computational efficiency. The analysis highlights the evolving shift from model-based techniques toward hybrid and data-centric frameworks capable of operating under uncertainty introduced by inverter-based resources and variable renewable generation. Critical challenges are identified, including scalability to large networks, robustness under low-inertia conditions, and the need for coordinated protection and control mechanisms. The study further examines the trade-offs inherent in existing methodologies and identifies research gaps in achieving fast, adaptive, and reliable island formation in future smart grids. It concludes by outlining emerging directions that combine wide-area monitoring, intelligent algorithms, and advanced control strategies to enhance the effectiveness of controlled islanding in increasingly decentralized and renewable-dominated power systems.

Keywords: Controlled Island, Coherent Generators, Minimal Generation-Load Imbalance, Minimal Power Flow Disruption

1. INTRODUCTION

Controlled islanding—also referred to as intentional system separation—has therefore emerged as a strategic last-resort measure for preventing cascading failures and restoring stability to power system variables during extreme disturbances (Hassani Ahangar, B. Gharehpetian, and Baghaee 2020). Cascaded failures of a power grid can be prevented through the strategic implementation of controlled islanding under extreme conditions of system disturbances(Liu et al. 2019). The search for coherent generators, which are generators that exhibit similar dynamic behaviours, is crucial to the formation of controlled islands (Avdakovic et al. 2014). Forming coherent groups of generators, identify the generators that are to be placed in the same islands. With the generators having similarity in dynamic behaviours placed together, the odds of maintaining stability in the formed islands are significantly improved (Alnassar 2024).

This study adopts a structured and transparent systematic review framework to identify, categorize, and critically evaluate controlled islanding methodologies. The review process was designed to ensure reproducibility and minimize selection bias. The literature search was conducted across the following major scientific databases: IEEE Xplore, Elsevier ScienceDirect, Springer Link, IET Digital Library, and MDPI Journals.
Google Scholar (for cross-verification and early-access publications. The following keywords and were used: “controlled islanding”, “power system separation”, “system partitioning”. Backward and forward citation tracking was performed to ensure inclusion of seminal and highly cited works.
To maintain relevance and technical depth, the following inclusion criteria were applied:

1. Peer-reviewed journal articles and full conference papers.
2. Studies proposing, improving, or benchmarking controlled islanding methodologies.
3. Papers containing mathematical formulation, algorithmic implementation, or validation results.
4. Studies applied to transmission-level or large-scale power systems.

The exclusion criteria were:

1. Non-peer-reviewed reports or opinion papers.
2. Studies focusing exclusively on distribution networks without controlled islanding.
3. Papers lacking methodological description.
4. Redundant works superseded by extended journal versions.

2. LITERATURE REVIEW OF RELATED WORKS

In this section, we present the various methods deployed in implementing controlled islanding. Controlled islanding amidst extreme system disturbances is usually achieved by providing answers to the following problems: which tie-lines to trip for the formation of a controlled island.

2.1 Optimization-Based Controlled Islanding Methods

Controlled islanding is implement using 2 distinct and contracdicting objectives. The minimal generation-load imbalance and the minimal powerflow disruption. The objective of minimal generation-load imbalance generation and load-lines to open such that it described in equation (1), (Amini Badr, Safari, and Najafi Ravadanegh 2023).

(1)

where is the set of islands, is the total generation, and is the total load on island .

On the other hand, minimizing power flow disruption, which is a different objective approach to controlled islanding, entails choosing tie-lines to open such that the tie-lines selected to be opened for island formation have the lowest impact on overall power flow according to equation (2).

,

(2)

where is the set of cut lines, is the real power flow on line

A Line capacity constraint is introduced such that the effect of opening strategic tie-lines does not result in an overload of other transmission lines according to equation (3).

(3)

It should be noted that minimal generation-load imbalance and minimal power flow disruption objectives are distinct philosophies that cannot be combined.

Mixed Integer Linear Programming (MILP) is deployed to determine suitable tie-lies to open for creating a controlled-island, which gives considerations to minimal load-generation imbalance and minimal power flow disruption (Okasha et al. 2024), (Teymouri and Amraee 2019) and (Demetriou et al. 2019). The methodology enables power-grid nodes to self-organize into balanced islands using a fully distributed process in which each boundary node estimates local island imbalances through consensus-based information exchange, which checks whether migrating to a neighboring island improves overall minimal generation-load balance while preserving connectivity, and moves accordingly. This one-node-at-a-time migration repeats until no further improvements are possible, producing near-optimal, balanced islands without any central controller(Lo Iudice et al. 2024). The paper proposes an Optimization-Based Intentional Islanding Scheme for Service Restoration (SR) in distribution systems, using a binary-coded Genetic Algorithm (GA) to find the near-optimal network topology. The primary objective is to maximize the restored high-priority load by partitioning the out-of-service area into multiple self-sufficient microgrids. The method is distinguished by a core Anti-Parallel Operation constraint, which ensures that each formed island contains only one Distributed Generation (DG) unit to simplify control and operation. The GA searches for optimal switch statuses that satisfy this constraint, alongside ensuring island power balance (with necessary load shedding), and adhering to bus voltage and branch capacity limits (Qiu et al. 2023).

2.2 Data-Driven & Measurement Coherency-Based Controlled Islanding

Coherent groups, detected when generator rotor angles start to swing together in response to a major system disturbance, form a more prevalent foundation for controlled islands when compared to slow coherency(Demetriou et al. 2015). The controlled islanding process treats these coherent groups—clusters of synchronized generators formed based on dynamic stability constraints. The network is partitioned in a manner strictly keeping all buses associated with a single coherent group together in one island (Davarikia et al. 2016).

Figure 1 explains the processes engaged for coherency based controlled islanding. During extreme cases of power system disturbance beyond the capacities of Flexible AC Transmission Systems (FACT), generator state variables (rotor angles in particular) are captured and analyzed during extreme system disturbances for similarity (coherency). Thus, by grouping coherent generators together combined with the optimized approach (i.e. minimal generation load imbalance or minimal power flow disruption), the formed islands are more likely to have their power system variables stabilized. Thus, the solutions to coherency analysis is factored into an optimization approach, thereby improving the tendency for stabilizing the power system variables in the formed islands.

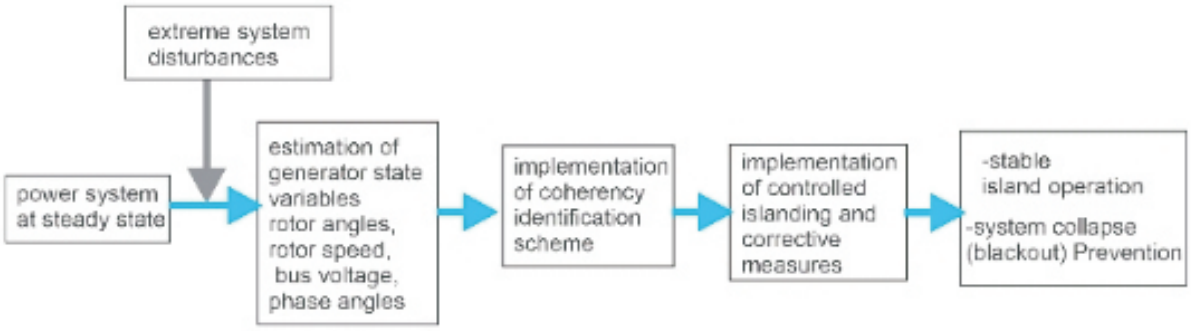

Figure 1: An illustration of the stages in coherency-based controlled islanding

On the other hand, Figure 2 ilustrates the impact of controlled islanding on the rotor angles of a power system. This is crucial because rotor angle instability significantly impacts power system variables.

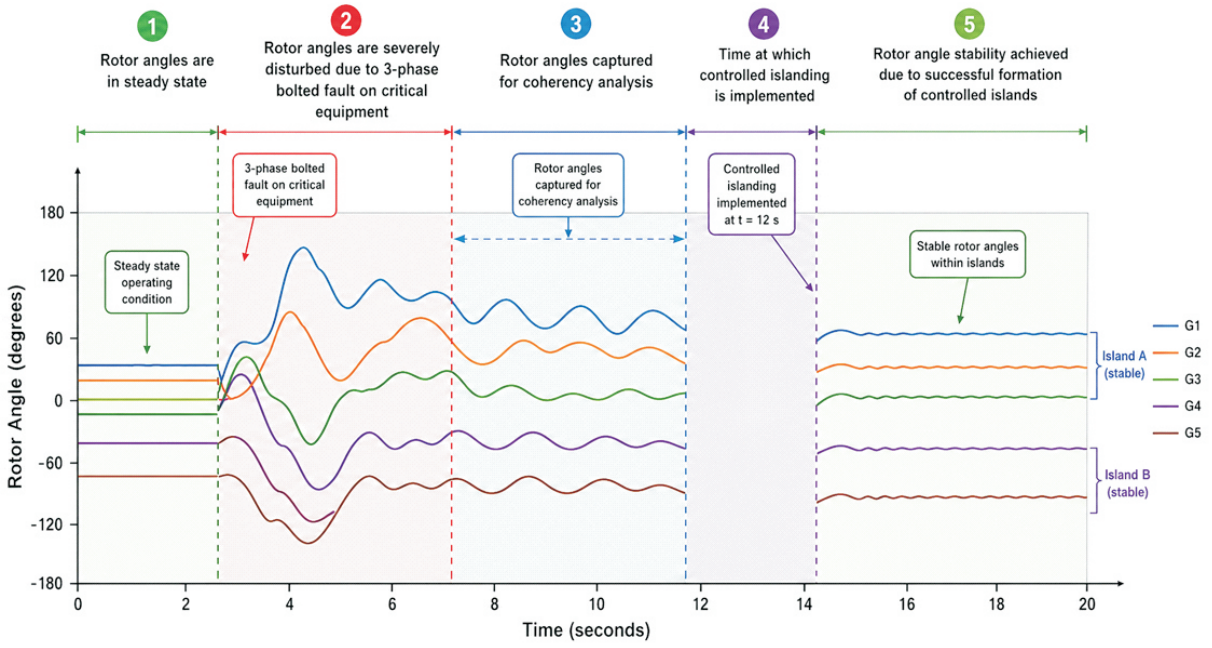

.3 Slow Coherency–Based Controlled Islanding Methods

The slow coherency approach proffers a coherency solution before system disturbance as opposed to Measurement Coherency-Based Controlled Islanding (Yang et al. 2016). The swing equation, which governs the dynamics of a synchronous generator, is shown as equation (4), (Badeeb and Hazza 2004).

(4)

Where:

is the generator's Mechanical (Input) power in pu

is the generator's Electrical (Output) power in pu

is the generator's rotor angle

H is the generator's Inertia constant in pu

is synchronous speed

Slow coherency is derived from the linearization of the swing equations of synchronous generators and the modal analysis of system dynamics. Thus, equation (1) is linearized to obtain equation (5) (Ilya Tyuryukanov and Mart A. M. M. van der Meijden 2021).

(5)

Where:

synchronization torque between machines

Diagonal matrix of machines scaled inertia

is the rotor angle of synchronous generators

is the linearized swing equation

The modes of a linearized system can be obtained by the eigenvalues of from equation (2). The mode shapes (eigenvectors) of low-frequency modes are then used to determine how each generator participates in these modes. With focus on the low-frequency modes, Generators with similar mode shapes are placed in the same coherent groups (Mukherjee, Chakrabortty, and Babaei 2021) showed that. Although slow coherency computations are carried out before system disturbance, i.e., linearization of the swing equation about a stable operating point, controlled islanding can be implemented using the solutions of the slow coherency approach as a basis (Yang et al. 2007) and (Zhou et al. 2008).

2.4 Graph-Theoretic and Spectral Controlled Islanding Methods

The Graph-theoretic approaches model the power system as a graph/network where Nodes (Vertices) represent buses or generators, the Edges (Links) represent transmission lines, often weighted by electrical parameters (e.g., admittance, power flow, coupling strength) (Tang et al. 2018). By viewing the power system as a graph, controlled islanding becomes a graph partitioning problem: divide the system into subgraphs (islands) such that stability, power balance, and coherence are preserved (Gomez and Rios 2015). Thus, islands are formed by opening weakly

connected links. Such links are established based on common Graph-Theoretic Techniques, such as the Minimum Cut set technique (Xiaoming Wang and Vijay Vittal 2004). Spectral Clustering, which is also a graph-based approach, is deployed to partition the power system graph (Ding et al. 2013) and (Babaei, Muyeen, and Islam 2019). After converting the power system to a graph, the method utilizes a combination of machine learning and optimization: first, a modified Self-Organizing Map (SOM) algorithm is applied to map the system buses onto a two-dimensional unit plane, preserving the system's topology and power exchange characteristics. Second, a Particle Swarm Optimization (PSO) algorithm is used to find the optimal coordinates for points that define the island regions. The resulting solution specifies which lines should be disconnected to create the fully connected, sustainable island (Trakas, Voumvoulakis, and Hatziargyriou 2014). A Deep Graph Convolutional Neural Network (GNN) approach for intentional islanding, designed to provide a rapid, real-time solution for power system stability during extreme power system disturbances is deployed. The power grid is first converted into a graph, and a deep GNN model is trained in an unsupervised manner. The optimization relies on minimizing a multi-objective loss function that incorporates a Normalized Minimal-Cut to determine the partitioning boundary. A final merging technique is applied to reassign any isolated buses to their nearest neighbour cluster, enhancing the final result for complex systems (Sun et al. 2021). The Directed Motif-Based Spectral Clustering Algorithm (MSCA) is the controlled islanding method, which addresses the dynamic stability of the power grid by using complex network theory. It first models the system as a Modified Directed Bipartite Graph (MDBG), where all coherent generators are pre-grouped and merged into single sources to satisfy a generator coherency constraint. Next, it employs electrical motifs (high-order, directed, and weighted subnetworks) to build a Motif Adjacency Matrix (MAM) that accurately captures the directional power flow. Finally, the optimal islands are defined by applying constrained k-means clustering to the Laplacian matrix derived from the MAM(Safarzadeh et al. 2025).

2.5 Heuristic & Rule-Based Controlled Islanding Methods

Power flow tracing is a method used to track the contribution of each generator (source) to the power consumed at each load (sink) by following how power flows through the transmission network. It essentially answers which generator supplies which load, and through which transmission lines. By proportionally allocating incoming and outgoing flows on each node, one can determine the Line usage contribution by different sources. Lines that carry “mixed” power contributions from many sources are more critical and less ideal for cutting, whereas lines dominated by a single flow are better candidates (Shao et al. 2018). The decline in the cost of renewables has led to a rise in renewable energy integration and optimization (Timmons, Harris, and Roach 2014). However, high penetration levels can be seen to impact a grid's stability as the renewables become a source of disturbance due to the fast dynamics and fluctuations, which they tend to introduce. These disturbances can be contained by intentionally islanding the renewables, which allows the renewables to operate as a microgrid-like island (Johnson et al. 2019).

3. ANALYTICAL REVIEW OF CONTROLLED ISLANDING METHODOLOGIES

A critical divide exists in how generator coherency, a prerequisite for stable island formation is established. The Slow Coherency approach utilizes linearized swing equations and modal analysis to identify generator groups before a disturbance occurs. This method is valued for its physical meaningfulness and robustness under classical machine models. However, its efficacy is increasingly challenged by the rise of Inverter-Based Resources (IBRs), which weaken traditional coherency patterns and render static system matrices less accurate(Wang et al. 2021).

In contrast, Data-Driven and(Banna et al. 2019) Signal-Processing methods derive coherency directly from Phasor Measurement Unit (PMU) data, such as voltage phase angles and frequency time series. While these methods capture real-time, disturbance-dependent behaviour, they introduce a dependency on high measurement coverage and are highly sensitive to signal noise. Moreover, rotor angles of generators are not directly estimated by PMUs(Heidary, Alikhanlou, and Aghamohammadi 2014).

The level of renewable energy penetration can be calculated in percentage using equation (6) (Khalil and Iravani 2018b).

(6)

Where:

is Renewable Energy Penetration Level

is the total renewable energy power generated in MW

is the total power generated from synchronous generator in MW

Thus, a 30% GFL penetration level and above tends to increase the number of coherent groups and therefore, further complicate coherency-based controlled islanding. (Johnson et al. 2019) and (Khalil and Iravani 2018b). Furthermore, Grid-Following (GFL) inverters—the most prevalent class of inverter-based resources (IBRs)—present significant analytical challenges because their control architecture partially or fully decouples their internal dynamics from the grid frequency. Due to this lack of inherent electromechanical coupling, contemporary trends in coherency detection typically treat GFLs as a collective entity or aggregate group, disregarding individual operational variances and excluding them from traditional generator coherency frameworks. (Babaei and Abu-Siada 2023). Figure 3 illustrates how a GFL connects with the grid via a fully-rated back-to-back converter.

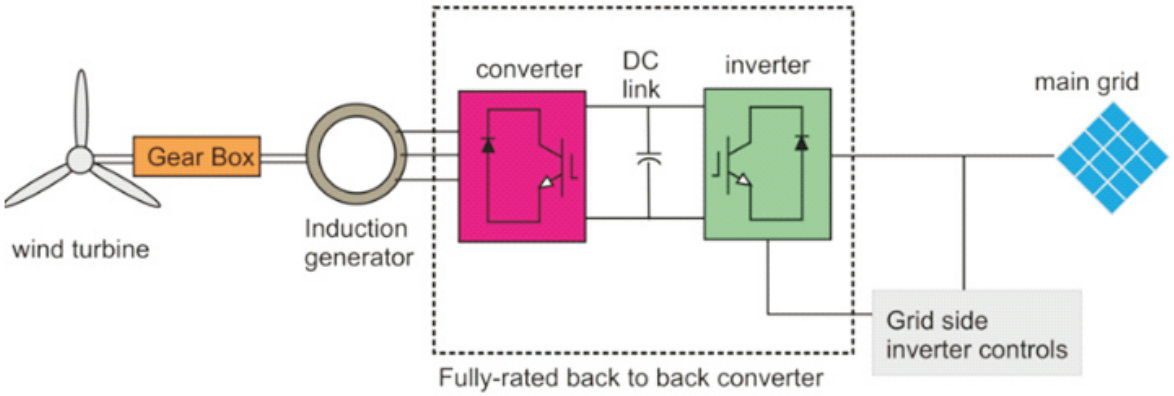

Figure 3 : separation of wind turbine dynamics and controls from the main grid by inverter technology (Quispe and Orduña 2022)

Once coherent groups are identified, the partitioning problem is governed by two distinct, often conflicting, optimization philosophies. The Minimal Generation-Load Imbalance approach prioritizes the internal equilibrium of the resulting islands to prevent immediate frequency collapse. Conversely, the Minimal Power Flow Disruption philosophy focuses on maintaining the structural integrity of the broader network by opening lines with the lowest impact on overall flow. However, the minimal power flow disruption approach is seen to produce islands that can easily be reconnected.

Recent research has shifted toward integrating Graph-Theoretic and Machine Learning (ML) techniques to overcome the computational bottlenecks of traditional optimization. Graph-theoretic and Spectral Clustering methods treat the power system as a weighted network, allowing for rapid partitioning of large-scale grids. While these methods are computationally efficient, they risk producing "electrically weak" islands if dynamic stability constraints are not strictly enforced. To bridge this gap, emerging studies utilize Deep Graph Convolutional Neural Networks (GNN) and Directed Motif-Based algorithms. These intelligent frameworks attempt to merge the speed of graph partitioning with the accuracy of multi-objective optimization, incorporating load-generation balance and generator placement directly into the neural network's loss function.

Table 1: Comparative Analysis of Controlled islanding Schemes

Class of Controlled Islanding Method	Core Principle	Required Inputs	Strengths	Limitations	Typical Applications
Slow Coherency–Based Methods	Partition generators into coherent groups based on electromechanical dynamics	Generator inertia, damping, network topology, system matrices	- Physically meaningful islands- Robust under classical machine models	- Needs accurate models- Less suited for high IBR penetration	Stability studies, wide-area damping control, and emergency splitting
Data-Driven & Signal-Processing Methods	Use measurement correlations (PMU data, coherency in signals) to identify islands	PMU data, frequency/angle time series	- Captures real-time system behaviour- Good for detecting dynamic coherency	- Requires extensive PMU coverage- Sensitive to noise	Online coherency detection, disturbance monitoring
Optimization-Based Methods	Formulates islanding as an optimization problem, minimizing cut-set, load shedding, or power imbalance	System topology, line flows, load/generation values	- Highly flexible- Can incorporate multiple constraints (stability, security)	- Computationally intensive- Scale issues in large grids	Optimal island formation under severe contingencies
Graph-Theoretic and Spectral Methods	Treat the power system as a graph and partition using clustering, spectral cuts, and modularity	Adjacency matrix, impedance/flow weights	- Fast- Scalable to large networks- Works with limited model info	- May ignore dynamic stability- Can produce electrically weak islands	Real-time splitting, large-scale systems, renewable-rich grids
Heuristic & Rule-Based Methods	Based on predefined rules (e.g., radial cuts, separation by	Topology, operational heuristics	- Simple and fast- Easy to implement	- Not optimal- May ignore dynamics and security	Small grids, emergency fast splitting, operator-

CONCLUSION

Controlled islanding has emerged as a vital strategy for enhancing the resilience, reliability, and stability of modern power systems. The literature reveals that intentional partitioning of the grid into self-sustaining islands helps prevent cascading failures, mitigates the risk of widespread blackouts, and enables faster restoration through coordinated black start procedures. A wide range of methodologies—including slow coherency-based methods, graph-theoretic approaches, spectral clustering, optimization techniques, and power flow tracing—have been developed to identify optimal island boundaries and ensure dynamic stability. Despite these advances, several challenges remain. The increasing penetration of renewable energy sources and inverter-based resources introduces complexities related to intermittency, reduced inertia, and protection coordination. Furthermore, balancing trade-offs between minimizing power flow disruption and maintaining generation–load balance requires multi-objective optimization frameworks that integrate both steady-state and dynamic constraints. Advances in wide-area monitoring, grid-forming inverters, and adaptive protection schemes offer promising pathways to overcome these challenges. In conclusion, controlled islanding is not only a defensive measure against blackouts but also a proactive tool for enabling resilient microgrid operation in renewable-dominated grids. The future of controlled islanding is defined by the necessity of adapting to low-inertia systems resulting from high renewable energy penetration, driving the need for sophisticated control strategies that utilize energy storage and demand response for fast frequency stabilization. Key trends include the use of multi-objective optimization and high-speed AI/Machine Learning algorithms to identify optimal splitting boundaries in real-time. Furthermore, future islanding schemes will heavily rely on Wide-Area Measurement Systems (WAMS) for precise data and will increasingly integrate with microgrids and Distributed Energy Resources (DERs), focusing on robust islanding detection and ensuring that created islands possess sufficient black start capability to expedite system restoration after a major disruption.

COMPETING INTERESTS

No competing interest

FUNDING

The author is a PhD student of the University of Lagos while the co-authors are supervisors. Hence this review paper is presented to the journal for publication on the premise that no APC is charged for authors from the University of Lagos.

AUTHORS' CONTRIBUTIONS

1. Mbey Vincent: Conceptualization, methodology, simulation, data analysis, and manuscript drafting.
2. Samson Akintunde Alayande: Supervision, and manuscript editing.
3. Sunday Adetona: Data collection, visualization, and result interpretation.
4. Adeola Balogun: critical review, validation

ACKNOWLEDGEMENTS

The authors wish to express their gratitude to the Department of Electrical and Electronics Engineering, University of Lagos, for the support and resources provided during the development of this research. We also acknowledge the researchers and publishers whose seminal works on controlled islanding and grid stability formed the basis of the analysis in the presented review article.

REFERENCES

Alnassar, Zainab. 2024. "Voltage Angle-Based Coherency Identification in Power System." (December 2023):1–17. doi:10.1049/gtd2.13141.

Amini Badr, Arman, Amin Safari, and Sajad Najafi Ravadanegh. 2023. "Segmentation of Interconnected Power Systems Considering Microgrids and the Uncertainty of Renewable Energy Sources." *IET Generation, Transmission and Distribution* 17(17):3814–27. doi:10.1049/gtd2.12934.

Avdakovic, Samir, Elvisa Becirovic, Amir Nuhanovic, and Mirza Kusljugic. 2014. "Generator Coherency Using the Wavelet Phase Difference Approach." *IEEE Transactions on Power Systems* 29(1):271–78. doi:10.1109/TPWRS.2013.2278881.

Babaei, Mehdi, and Ahmed Abu-Siada. 2023. "Intentional Controlled Islanding Strategy for Wind Power Plant Integrated Systems." *Energies* 16(12).doi:10.3390/en16124572.

Babaei, Mehdi, S. M. Muyeen, and Syed Islam. 2019. "The Impact of Number of Partitions on Transient Stability of Intentional Controlled Islanding." *Proceedings - 2019 IEEE International Conference on Environment and Electrical Engineering and 2019 IEEE Industrial and Commercial Power Systems Europe, EEEIC/I and CPS Europe 2019*. doi:10.1109/EEEIC.2019.8783457.

Badeeb, Omer M. Awed, and Gamal A. W. Hazza. 2004. "Application of the Slow Coherency Decomposition Method to the Yemeni Network." *International Journal of Electrical Engineering and Education* 41(1):56–63. doi:10.7227/IJEEE.41.1.5.

Banna, Hasan Ul, Zhe Yu, Di Shi, Zhiwei Wang, Dawei Su, Chunlei Xu, Sarika Khushalani Solanki, and Jignesh M. Solanki. 2019. "Online Coherency Identification and Power Generation Interface for Smart Microgrid Islanding Studies." *Journal of Modern Power Systems and Clean Energy* 7(1):38–54. doi:10.1007/s40565-018-0443-z.

Chakrabarti, Shaunak, Elizabeth Kyriakides, Tao Bi, Deyi Cai, and Vladimir A. Ordonez, Jimmy C. Peng, and Mehrdad Ghandhari. 2016. "Non-Synchronous Generation Impact on Power Systems Coherency." *IET Generation, Transmission and Distribution* 10(10):2443–53. doi:10.1049/iet-gtd.2015.1233.

Davarikia, Hamzeh, Faycal Znidi, Mohammad Reza Aghamohammadi, and Kamran Iqbal. 2016. "Identification of Coherency Groups of Generators Based on Inertia Coefficient." *2016 IEEE Power and Energy Society General Meeting, PESGM 2016*. doi:10.1109/PESGM.2016.7741638.

Demetriou, Panayiotis, Lenos Hadjidemetriou, Alexis Kyriacou, Elias Kyriakides, and Christos Panayiotou. 2015. "Real-Time Identification of Coherent Generator Groups." *2015 IEEE Eindhoven PowerTech, PowerTech 2015*. doi:10.1109/PTC.2015.7232619.

Demetriou, Panayiotis, Alexis Kyriacou, Elias Kyriakides, and Christos Panayiotou. 2019. "Intentional Controlled Islanding of Power Systems Equipped With Battery Energy Storage Systems." *2019 IEEE Milan PowerTech* 1–6.

Ding, Lei, Francisco M. Gonzalez-Longatt, Peter Wall, and Vladimir Terzija. 2013. "Two-Step Spectral Clustering Controlled Islanding Algorithm." *IEEE Transactions on Power Systems* 28(1):75–84. doi:10.1109/TPWRS.2012.2197640.

Eshaei-Sani, Rohollah, and Mahdi Kazemi. 2017. "Prevention of Power Grid Blackouts Using Intentional Islanding Scheme." *IEEE Transactions on Industry Applications* 53(1):622–29. doi:10.1109/TIA.2016.2614772.

Gomez, Oscar, and Mario A. Rios. 2015. "Real Time Identification of Coherent Groups for Controlled Islanding Based on Graph Theory." *IET Generation, Transmission and Distribution* 9(8):748–58. doi:10.1049/iet-gtd.2014.0865.

Gharehpetian, Gevork B., Hamid Reza Baghaee, and Hamid Reza Baghaee. 2020. "A Review on Intentional Controlled Islanding in Smart Power Systems and Generalized Framework for ICI in Microgrids." *International Journal of Electrical Power and Energy Systems* 118(April 2019):105709. doi:10.1016/j.ijepes.2019.105709.

Heidary, M., S. Alikhanlou, and M. R. Aghamohammadi. 2014. “Estimation of Rotor Angle Based on Operating Variables Measured by PMU.” in *Intenational Association of Journals and Conferences (IAJC)*.
Ilya Tyuryukanov, Marjan Popov, and Vladimir Terzija Mart A. M. M. van der Meijden. 2021. “Slow Coherency Identification and Power System Dynamic Model Reduction by Using Orthogonal Structure of Electromechanical Eigenvectors.” *IEEE TRANSACTIONS ON POWER SYSTEMS* 36(2):1482–92. doi:10.1109/TPWRS.2020.3009628.
Lo Iudice, Francesco, Ricardo Cardona-Rivera, Antonio Grotta, Marco Coraggio, and Mario Di Bernardo. 2024. “Consensus-Based Distributed Intentional Controlled Islanding of Power Grids.” *IEEE Transactions on Control of Network Systems* 11(1):233–43.
doi:10.1109/TCNS.2023.3277805.
Papageorgiou, Dharik S. Mallapragada, Thomas A. Deetjen, Joshua D. Rhodes, and Michael E. Webber. 2019. “Evaluating Rotational Inertia as a Component of Grid Reliability with High Penetrations of Variable Renewable Energy.” *Energy* 180:258–71. doi:10.1016/j.energy.2019.04.216.
Khalil, Ahmed Mostafa, and Reza Iravani.2018a. “Power System Coherency Identification under High Depth of Penetration of Wind Power.”*IEEE Transactions on Power Systems* 33(5):5401–9. doi:10.1109/TPWRS.2018.2809548.
Khalil, Ahmed Mostafa, and Reza Iravani.2018b. “Power System Coherency Identification under High Depth of Penetration of Wind Power.”*IEEE Transactions on Power Systems* 33(5):5401–9. doi:10.1109/TPWRS.2018.2809548.
Liu, Yanzhu, Andrew Wang, Linda Bushnell, Daniel S. Kirschen, and Radha Poovendran. 2019. “Controlled Islanding via Weak Submodularity.” *IEEE Transactions on Power Systems* 34(3):1858–68. doi:10.1109/TPWRS.2018.2881163.
Mukherjee, Sayan, Aranya Chakrabortty, and Iman Babaei. 2021. “Modeling and Quantifying the Impact of Wind Penetration on Slow Coherency of Power Systems.” *IEEE Transactions on Power Systems* 36(2):1002–12. doi:10.1109/TPWRS.2020.3022832.
Okasha, Aliaa A., Diaa Eldin A. Mansour, Ahmed B. Zaky, Junya Suehiro, and Tamer F. Megahed. 2024. “A Novel IoT-Based Controlled Islanding Strategy for Enhanced Power System Stability and Resilience.” *Smart Cities* 7(6):3871–94. doi:10.3390/smartcities7060149.
Qiu, Bangjie, Jae Guk An, Jin Uk Song, and Yun Sik Oh. 2023. “An Optimization-Based Intentional Islanding Scheme for Service Restoration in Distribution Systems Considering Anti-Parallel Operation of Distributed Generations.” *Applied Sciences (Switzerland)* 13(9). doi:10.3390/app13095501.
Quispe, Juan Carlos, and Eduardo Orduña. 2022. “Transmission Line Protection Challenges Influenced by Inverter-Based Resources: A Review.” *Protection and Control of Modern Power Systems* 7(1):1–17. doi:10.1186/s41601-022-00249-8.
Safarzadeh, Mohsen, Gholam Reza Yousefi, Mohammad Amin Latify, and Zeinab Maleki. 2025. “Power System Controlled Islanding Using Directed Motif-Based Spectral Clustering: A Novel Complex Network Perspective.” *IET Smart Grid* 8(1). doi:10.1049/stg2.70007.
Shao, Hongbo, Yubin Mao, Yongmin Liu, Wanxun Liu, Sipei Sun, Peng Jia, Fufeng Miao, Li Yang, Chang Han, and Bo Zhang. 2018. “A Three-Stage Procedure for Controlled Islanding to Prevent Wide-Area Blackouts.” *Energies* 11(11):1–15. doi:10.3390/en11113066.
Sun, Zhonglin, Yannis Spyridis, Thomas Lagkas, Achilleas Sesis, Georgios Efstathopoulos, and Panagiotis Sarigiannidis. 2021. “End-to-End Deep Graph Convolutional Neural Network Approach for Intentional Islanding in Power Systems Considering Load-Generation Balance.” *Sensors* 21(5):1–15. doi:10.3390/s21051650.

Tang, Yi, Feng Li, Chenyi Zheng, Qi Wang, and Yingjun Wu. 2018. "PMU Measurement-Based Intelligent Strategy for Power System Controlled Islanding." *Energies* 11(1):1–15. doi:10.3390/en11010143.
Teymouri, Farhad, and Turaj Amraee. 2019. "An MILP Formulation for Controlled Islanding Coordinated with under Frequeny Load Shedding Plan." *Electric Power Systems Research* 171(February):116–26. doi:10.1016/j.epsr.2019.02.009.
Timmons, David, Jonathan M. Harris, and Brian Roach. 2014. *The Economics of Renewable Energy A GDAE Teaching Module on Social and Environmental Issues in Economics*. http://ase.tufts.edu/gdae.
Trakas, D. N., E. M. Voumvoulakis, and N. D. Hatziargyriou. 2014. "Controlled Islanding of Power Networks Using Machine Learning Algorithm." Pp. 50 (6 pp.)-50 (6 pp.) in *MedPower 2014*. Institution of Engineering and Technology.
Wang, Xiaohui, Lei DIng, Zhenbin Ma, Rasoul Azizipanah-Abarghooee, and Vladimir Terzija. 2021. "Perturbation-Based Sensitivity Analysis of Slow Coherency with Variable Power System Inertia." *IEEE Transactions on Power Systems* 36(2):1121–29. doi:10.1109/TPWRS.2020.3020837.
Xiaoming Wang, and Vijay Vittal. 2004. "System Islanding Using Minimal Cutsets with Minimum Net Flow." Pp. 1–6 in *IEEE PES Power Systems Conference and Exposition*.IEEE.
Yang, Bo, Vijay Vittal, Gerald T. Heydt, and Arunabha Sen. 2007. "A Novel Slow Coherency Based Graph Theoretic Islanding Strategy." *2007 IEEE Power Engineering Society General Meeting, PES*. doi:10.1109/PES.2007.386173.
Yang, Yinguo, Qingang Duan, Guobing Wu, Rui Chen, Li Li, Zhi An, Jingmin Ni, and Chen Shen. 2016. "Slow Coherency Based Adaptive Controlled Islanding Scheme of the China Southern Power Grid." *Asia-Pacific Power and Energy Engineering Conference, APPEEC* 2016-Janua, 1–5. doi:10.1109/APPEEC.2015.7381048.
Zhou, Zi-guan, Xiaomin Bai, Shan Shan Zhao, Zaihua Li, Jing Xu, Xiaojun Li, and Wei Zhao. 2008. "A New Islanding Boundary Searching Approach Based on Slow Coherency and Graph Theoretic." *Proceedings - 4th International Conference on Natural Computation, ICNC 2008* 6(978):438–42. doi:10.1109/ICNC.2008.523.